MINI PRO - STORED PRESSURE

ADAPTIVE (PRODUCT OVERVIEW)

Small in size but not in might. Being the smallest suppression system - Mini has enough might to secure small enclosed spaces. Ceasefire Mini-Adaptive System is specifically designed for the micro-environments which are too small to even accommodate a Mini.

The body of the Mini stays outside and a thin barrel goes inside the micro-environment. Mini being fully automatic can detect, actuate, and suppress fires without any form of human intervention. At the same time, it is available in Fluroketone which happens to be a cold gas, therefore, extinguishes fire by absorbing heat from it. After being sprayed it leaves behind no residue and works on class A, B, C, and Electrically started fires.

The clean agent based variant does not fall under the ambit of the F-Gas Regulations.



ENGINEERING DRAWINGS (50mm Barrel)

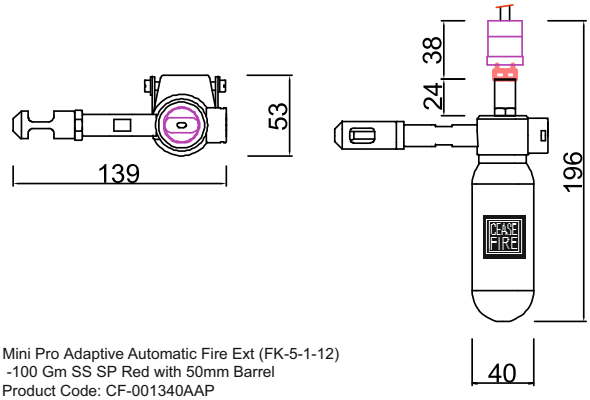

Mini Pro Adaptive Automatic Fire Ext (FK-5-1-12) -100 Gm SS SP Red with 50mm Barrel
Product Code: CF-001340AAP

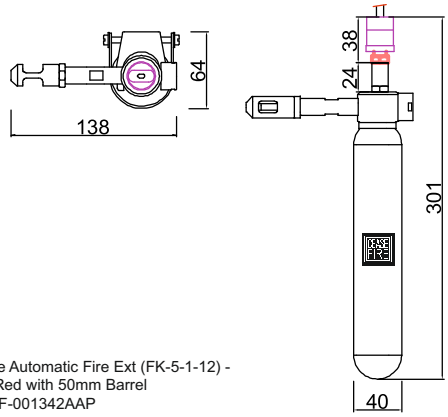

Mini Pro Adaptive Automatic Fire Ext (FK-5-1-12) - 200 Gm SS SP Red with 50mm Barrel
Product Code: CF-001342AAP

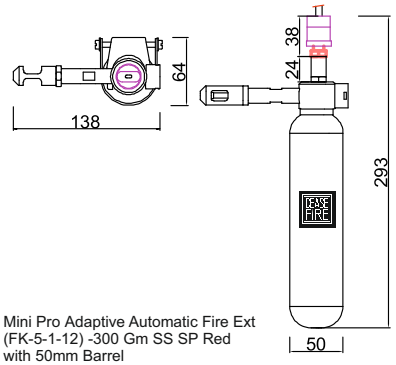

Mini Pro Adaptive Automatic Fire Ext (FK-5-1-12) -300 Gm SS SP Red with 50mm Barrel
Product Code: CF-001344AAP

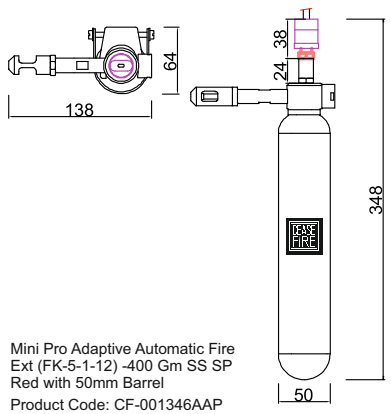

Mini Pro Adaptive Automatic Fire Ext (FK-5-1-12) -400 Gm SS SP Red with 50mm Barrel
Product Code: CF-001346AAP

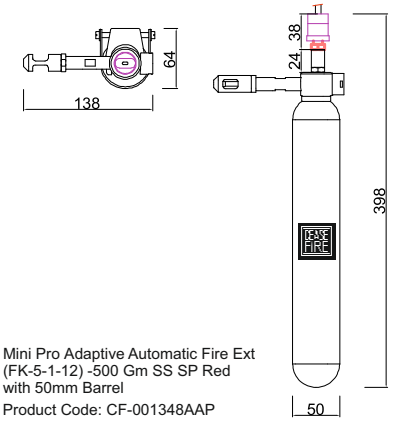

Mini Pro Adaptive Automatic Fire Ext (FK-5-1-12) -500 Gm SS SP Red with 50mm Barrel
Product Code: CF-001348AAP

ENGINEERING DRAWINGS (100mm Barrel)

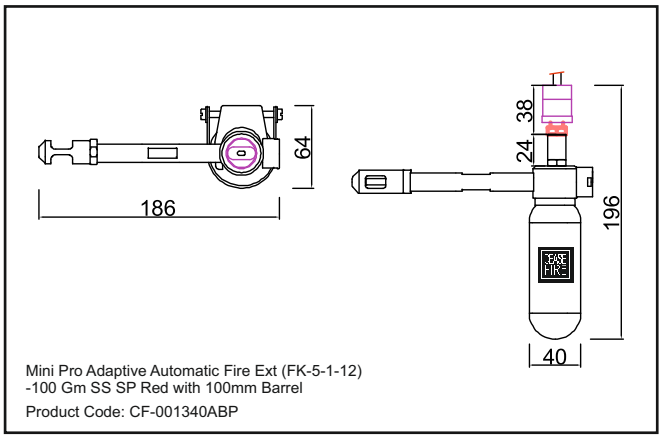

Mini Pro Adaptive Automatic Fire Ext (FK-5-1-12)
-100 Gm SS SP Red with 100mm Barrel
Product Code: CF-001340ABP

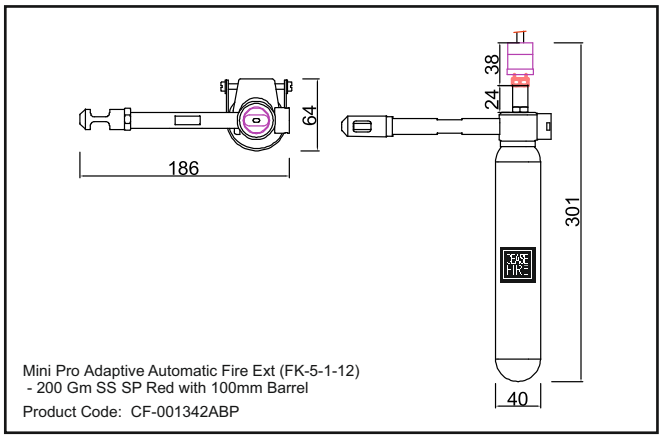

Mini Pro Adaptive Automatic Fire Ext (FK-5-1-12)
- 200 Gm SS SP Red with 100mm Barrel
Product Code: CF-001342ABP

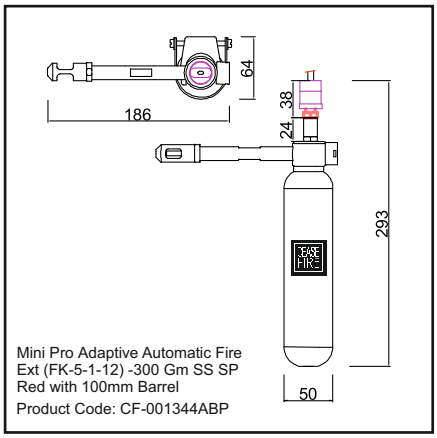

Mini Pro Adaptive Automatic Fire
Ext (FK-5-1-12) -300 Gm SS SP
Red with 100mm Barrel
Product Code: CF-001344ABP

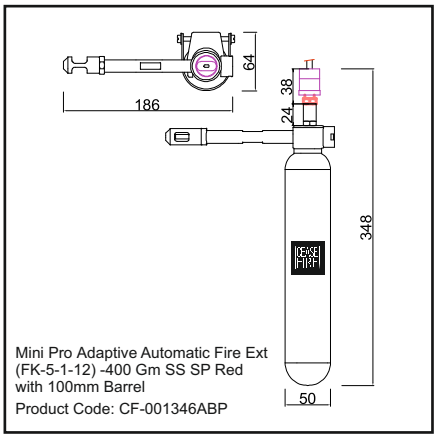

Mini Pro Adaptive Automatic Fire Ext
(FK-5-1-12) -400 Gm SS SP Red
with 100mm Barrel
Product Code: CF-001346ABP

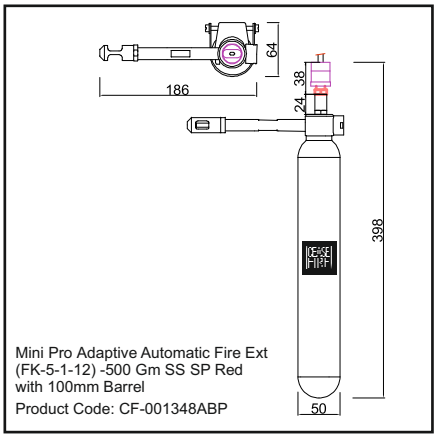

Mini Pro Adaptive Automatic Fire Ext
(FK-5-1-12) -500 Gm SS SP Red
with 100mm Barrel
Product Code: CF-001348ABP

ENGINEERING DRAWINGS (200mm Barrel)

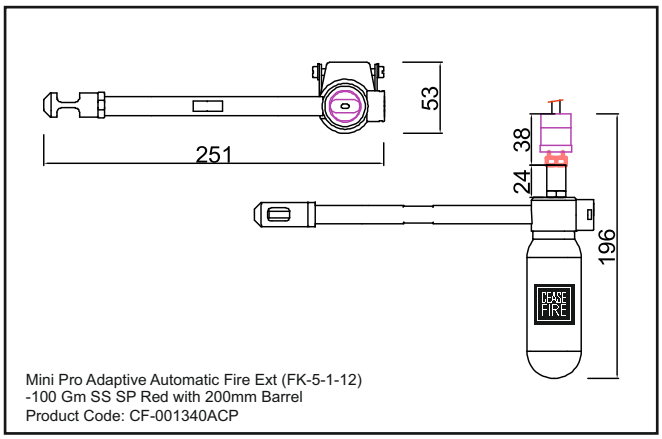

Mini Pro Adaptive Automatic Fire Ext (FK-5-1-12)
-100 Gm SS SP Red with 200mm Barrel
Product Code: CF-001340ACP

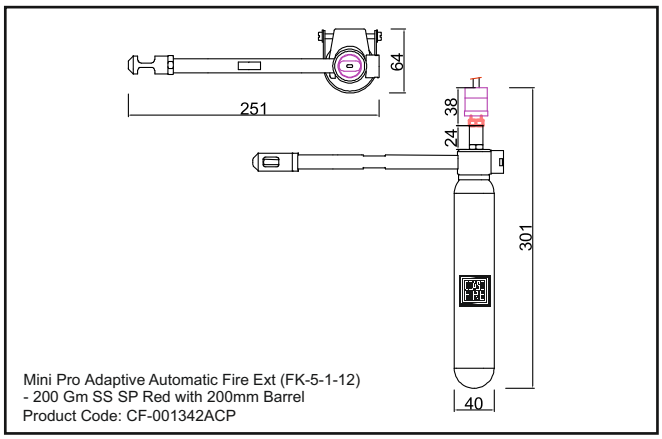

Mini Pro Adaptive Automatic Fire Ext (FK-5-1-12)
- 200 Gm SS SP Red with 200mm Barrel
Product Code: CF-001342ACP

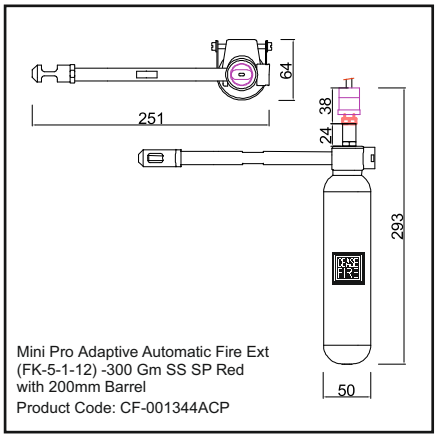

Mini Pro Adaptive Automatic Fire Ext
(FK-5-1-12) -300 Gm SS SP Red
with 200mm Barrel
Product Code: CF-001344ACP

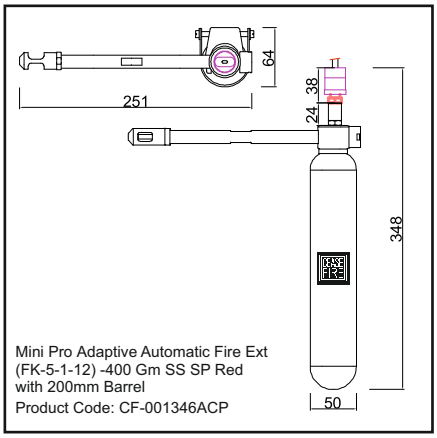

Mini Pro Adaptive Automatic Fire Ext
(FK-5-1-12) -400 Gm SS SP Red
with 200mm Barrel
Product Code: CF-001346ACP

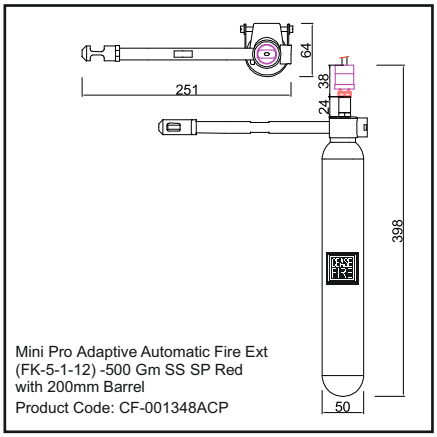

Mini Pro Adaptive Automatic Fire Ext
(FK-5-1-12) -500 Gm SS SP Red
with 200mm Barrel
Product Code: CF-001348ACP

TECHNICAL SPECIFICATIONS (50mm Barrel)

Product Code	UOM	CF-001340AAP ● CF-001340BA ● CF-001340DA ● CF-001340CA ● CF-001340EA ●	CF-001342AAP ● CF-001342BA ● CF-001342DA ● CF-001342CA ● CF-001342EA ●	CF-001344AAP ● CF-001344BA ● CF-001344DA ● CF-001344CA ● CF-001344EA ●	CF-001346AAP ● CF-001346BA ● CF-001346DA ● CF-001346CA ● CF-001346EA ●	CF-001348AAP ● CF-001348BA ● CF-001348DA ● CF-001348CA ● CF-001348EA ●
Description	–	Mini Pro Adaptive Automatic Fire Ext (FK-5-1-12) -100 Gm SS SP Red with 50mm Barrel	Mini Pro Adaptive Automatic Fire Ext (FK-5-1-12) - 200 Gm SS SP Red with 50mm Barrel	Mini Pro Adaptive Automatic Fire Ext (FK-5-1-12) -300 Gm SS SP Red with 50mm Barrel	Mini Pro Adaptive Automatic Fire Ext (FK-5-1-12) -400 Gm SS SP Red with 50mm Barrel	Mini Pro Adaptive Automatic Fire Ext (FK-5-1-12) -500 Gm SS SP Red with 50mm Barrel
Capacity of Agent	Grms	100	200	300	400	500
Certification	–	ISO 9001 PED BSI TESTED*	ISO 9001 PED BSI TESTED*	ISO 9001 PED BSI TESTED*	ISO 9001 PED BSI TESTED*	ISO 9001 PED BSI TESTED*
Diameter of Shell	mm	40	40	50	50	50
Total Height (approx.)	mm	134	239	231	286	336
MOC of Shell	–	SS 316L (1.4435)	SS 316L (1.4435)	SS 316L (1.4435)	SS 316L (1.4435)	SS 316L (1.4435)
Min. Wall Thickness	mm	1.2	1.2	1.2	1.2	1.2
Test Pressure	Bar	35	35	35	35	35
Anti-Corrosive Treatment	–	Outer surfaces are EP Powder coated having Thickness 50 Micron Min. RAL Shade 3000	Outer surfaces are EP Powder coated having Thickness 50 Micron Min. RAL Shade 3000	Outer surfaces are EP Powder coated having Thickness 50 Micron Min. RAL Shade 3000	Outer surfaces are EP Powder coated having Thickness 50 Micron Min. RAL Shade 3000	Outer surfaces are EP Powder coated having Thickness 50 Micron Min. RAL Shade 3000
Service Pressure	Bar	10	10	10	10	10
Type of Operating Mechanism	–	Automatic	Automatic	Automatic	Automatic	Automatic

TECHNICAL SPECIFICATIONS (50mm Barrel)

Product Code	UOM	CF-001340AAP ● CF-001340BA ● CF-001340DA ● CF-001340CA ● CF-001340EA ●	CF-001342AAP ● CF-001342BA ● CF-001342DA ● CF-001342CA ● CF-001342EA ●	CF-001344AAP ● CF-001344BA ● CF-001344DA ● CF-001344CA ● CF-001344EA ●	CF-001346AAP ● CF-001346BA ● CF-001346DA ● CF-001346CA ● CF-001346EA ●	CF-001348AAP ● CF-001348BA ● CF-001348DA ● CF-001348CA ● CF-001348EA ●
Type of Pressure Gauge	–	Magnetic Bourdon Tube Type	Magnetic Bourdon Tube Type	Magnetic Bourdon Tube Type	Magnetic Bourdon Tube Type	Magnetic Bourdon Tube Type
Type of Discharge Fitting	mm	Direct nozzle with Quartzoid Bulb	Direct nozzle with Quartzoid Bulb	Direct nozzle with Quartzoid Bulb	Direct nozzle with Quartzoid Bulb	Direct nozzle with Quartzoid Bulb
Concentration (V/wt.)	%	4.7	4.7	4.7	4.7	4.7
Coverage Volume	m^3	0.130	0.260	0.290	0.520	0.650
Min. Discharge Time	Sec.	1 to 3	1 to 3	1 to 3	1 to 3	1 to 3
Operating Temperature Range	^0C	-20 to 60	-20 to 60	-20 to 60	-20 to 60	-20 to 60
Actuation Temperature**	^0C	57°	57°	57°	57°	57°
Applicable to Type of Fire	–	A, B, C ,& Electrical Started Fire	A, B, C ,& Electrical Started Fire	A, B, C ,& Electrical Started Fire	A, B, C ,& Electrical Started Fire	A, B, C ,& Electrical Started Fire
Gross Weight (approx.)***	Kg	0.93	1.3	1.5	1.75	1.96
Product Warranty****	Year	10	10	10	10	10

TECHNICAL SPECIFICATIONS (50mm Barrel)						
Product Code	**UOM**	**CF-001340AAP** 🟠 **CF-001340BA** 🔴 **CF-001340DA** 🟡 **CF-001340CA** 🟢 **CF-001340EA** 🔵	**CF-001342AAP** 🟠 **CF-001342BA** 🔴 **CF-001342DA** 🟡 **CF-001342CA** 🟢 **CF-001342EA** 🔵	**CF-001344AAP** 🟠 **CF-001344BA** 🔴 **CF-001344DA** 🟡 **CF-001344CA** 🟢 **CF-001344EA** 🔵	**CF-001346AAP** 🟠 **CF-001346BA** 🔴 **CF-001346DA** 🟡 **CF-001346CA** 🟢 **CF-001346EA** 🔵	**CF-001348AAP** 🟠 **CF-001348BA** 🔴 **CF-001348DA** 🟡 **CF-001348CA** 🟢 **CF-001348EA** 🔵
Transportation Bracket						
MOC	–	Black Powder Coated Ms	Black Powder Coated Ms	Black Powder Coated Ms	Black Powder Coated Ms	Black Powder Coated Ms
Dimension H*W*D	mm	104 x 77 x 57	177 x 77 x 57	170 x 87 x 67	225 x 87 x 67	282 x 87 x 67

* Mini tested for it fire fighting capabilities by BSI.
**Quartzoid bulb in other temperature setting as below is available on request and would be dependent on MOQ for your region. Please check the availability and delivery time before ordering.
***It includes Empty Extinguisher, Contents, QBD / Barrel.
****The warranty is subject to the terms and conditions mentioned on the warranty card.

QUARTZOID BULB KEY

🟠 57°C / 135°F | 🔴 68°C / 155°F | 🟡 79°C / 174°F | 🟢 93°C / 200°F | 🔵 141°C / 286°F

CERTIFICATIONS

CE 1128 bsi. Tested

TECHNICAL SPECIFICATIONS (100mm Barrel)

Product Code	UOM	CF-001340ABP ● CF-001340BB ● CF-001340DB ● CF-001340CB ● CF-001340EB ●	CF-001342ABP ● CF-001342BB ● CF-001342DB ● CF-001342CB ● CF-001342EB ●	CF-001344ABP ● CF-001344BB ● CF-001344DB ● CF-001344CB ● CF-001344EB ●	CF-001346ABP ● CF-001346BB ● CF-001346DB ● CF-001346CB ● CF-001346EB ●	CF-001348ABP ● CF-001348BB ● CF-001348DB ● CF-001348CB ● CF-001348EB ●
Description	–	Mini Pro Adaptive Automatic Fire Ext (FK-5-1-12) -100 Gm SS SP Red with 100mm Barrel	Mini Pro Adaptive Automatic Fire Ext (FK-5-1-12) - 200 Gm SS SP Red with 100mm Barrel	Mini Pro Adaptive Automatic Fire Ext (FK-5-1-12) -300 Gm SS SP Red with 100mm Barrel	Mini Pro Adaptive Automatic Fire Ext (FK-5-1-12) -400 Gm SS SP Red with 100mm Barrel	Mini Pro Adaptive Automatic Fire Ext (FK-5-1-12) -500 Gm SS SP Red with 100mm Barrel
Capacity of Agent	Grms	100	200	300	400	500
Certification	–	ISO 9001 PED BSI TESTED*	ISO 9001 PED BSI TESTED*	ISO 9001 PED BSI TESTED*	ISO 9001 PED BSI TESTED*	ISO 9001 PED BSI TESTED*
Diameter of Shell	mm	40	40	50	50	50
Total Height (approx.)	mm	134	239	231	286	336
MOC of Shell	–	SS 316L (1.4435)	SS 316L (1.4435)	SS 316L (1.4435)	SS 316L (1.4435)	SS 316L (1.4435)
Min. Wall Thickness	mm	1.2	1.2	1.2	1.2	1.2
Test Pressure	Bar	35	35	35	35	35
Anti-Corrosive Treatment	–	Outer surfaces are EP Powder coated having Thickness 50 Micron Min. RAL Shade 3000	Outer surfaces are EP Powder coated having Thickness 50 Micron Min. RAL Shade 3000	Outer surfaces are EP Powder coated having Thickness 50 Micron Min. RAL Shade 3000	Outer surfaces are EP Powder coated having Thickness 50 Micron Min. RAL Shade 3000	Outer surfaces are EP Powder coated having Thickness 50 Micron Min. RAL Shade 3000
Service Pressure	Bar	10	10	10	10	10
Type of Operating Mechanism	–	Automatic	Automatic	Automatic	Automatic	Automatic

TECHNICAL SPECIFICATIONS (100mm Barrel)

Product Code	UOM	CF-001340ABP ● CF-001340BB ● CF-001340DB ● CF-001340CB ● CF-001340EB ●	CF-001342ABP ● CF-001342BB ● CF-001342DB ● CF-001342CB ● CF-001342EB ●	CF-001344ABP ● CF-001344BB ● CF-001344DB ● CF-001344CB ● CF-001344EB ●	CF-001346ABP ● CF-001346BB ● CF-001346DB ● CF-001346CB ● CF-001346EB ●	CF-001348ABP ● CF-001348BB ● CF-001348DB ● CF-001348CB ● CF-001348EB ●
Type of Pressure Gauge	–	Magnetic Bourdon Tube Type	Magnetic Bourdon Tube Type	Magnetic Bourdon Tube Type	Magnetic Bourdon Tube Type	Magnetic Bourdon Tube Type
Type of Discharge Fitting	mm	Direct nozzle with Quartzoid Bulb	Direct nozzle with Quartzoid Bulb	Direct nozzle with Quartzoid Bulb	Direct nozzle with Quartzoid Bulb	Direct nozzle with Quartzoid Bulb
Concentration (V/wt.)	%	4.7	4.7	4.7	4.7	4.7
Coverage Volume	m^3	0.130	0.260	0.290	0.520	0.650
Min. Discharge Time	Sec.	1 to 3	1 to 3	1 to 3	1 to 3	1 to 3
Operating Temperature Range(approx.)	^0C	-20 to 60	-20 to 60	-20 to 60	-20 to 60	-20 to 60
Actuation Temperature**	^0C	57°	57°	57°	57°	57°
Applicable to Type of Fire	–	A, B, C ,& Electrical Started Fire	A, B, C ,& Electrical Started Fire	A, B, C ,& Electrical Started Fire	A, B, C ,& Electrical Started Fire	A, B, C ,& Electrical Started Fire
Gross Weight (approx.)***	Kg	0.97	1.08	1.5	1.75	2
Product Warranty****	Year	10	10	10	10	10

TECHNICAL SPECIFICATIONS (100mm Barrel)						
Product Code	**UOM**	**CF-001340ABP** 🟠 **CF-001340BB** 🔴 **CF-001340DB** 🟡 **CF-001340CB** 🟢 **CF-001340EB** 🔵	**CF-001342ABP** 🟠 **CF-001342BB** 🔴 **CF-001342DB** 🟡 **CF-001342CB** 🟢 **CF-001342EB** 🔵	**CF-001344ABP** 🟠 **CF-001344BB** 🔴 **CF-001344DB** 🟡 **CF-001344CB** 🟢 **CF-001344EB** 🔵	**CF-001346ABP** 🟠 **CF-001346BB** 🔴 **CF-001346DB** 🟡 **CF-001346CB** 🟢 **CF-001346EB** 🔵	**CF-001348ABP** 🟠 **CF-001348BB** 🔴 **CF-001348DB** 🟡 **CF-001348CB** 🟢 **CF-001348EB** 🔵
Transportation Bracket						
MOC	–	Black Powder Coated Ms	Black Powder Coated Ms	Black Powder Coated Ms	Black Powder Coated Ms	Black Powder Coated Ms
Dimension H*W*D	mm	104 x 77 x 57	177 x 77 x 57	170 x 87 x 67	225 x 87 x 67	282 x 87 x 67

* Mini tested for it fire fighting capabilities by BSI.
**Quartzoid bulb in other temperature setting as below is available on request and would be dependent on MOQ for your region. Please check the availability and delivery time before ordering.
***It includes Empty Extinguisher, Contents, QBD / Barrel.
****The warranty is subject to the terms and conditions mentioned on the warranty card.

QUARTZOID BULB KEY

🟠 57°C / 135°F | 🔴 68°C / 155°F | 🟡 79°C / 174°F | 🟢 93°C / 200°F | 🔵 141°C / 286°F

CERTIFICATIONS

CE 1128

bsi. Tested

TECHNICAL SPECIFICATIONS (200mm Barrel)

Product Code	UOM	CF-001340ACP ● CF-001340BC ● CF-001340DC ● CF-001340CC ● CF-001340EC ●	CF-001342ACP ● CF-001342BC ● CF-001342DC ● CF-001342CC ● CF-001342EC ●	CF-001344ACP ● CF-001344BC ● CF-001344DC ● CF-001344CC ● CF-001344EC ●	CF-001346ACP ● CF-001346BC ● CF-001346DC ● CF-001346CC ● CF-001346EC ●	CF-001348ACP ● CF-001348BC ● CF-001348DC ● CF-001348CC ● CF-001348EC ●
Description	–	Mini Pro Adaptive Automatic Fire Ext (FK-5-1-12) -100 Gm SS SP Red with 200mm Barrel	Mini Pro Adaptive Automatic Fire Ext (FK-5-1-12) - 200 Gm SS SP Red with 200mm Barrel	Mini Pro Adaptive Automatic Fire Ext (FK-5-1-12) -300 Gm SS SP Red with 200mm Barrel	Mini Pro Adaptive Automatic Fire Ext (FK-5-1-12) -400 Gm SS SP Red with 200mm Barrel	Mini Pro Adaptive Automatic Fire Ext (FK-5-1-12) -500 Gm SS SP Red with 200mm Barrel
Capacity of Agent	Grms	100	200	300	400	500
Certification	–	ISO 9001 PED BSI TESTED*	ISO 9001 PED BSI TESTED*	ISO 9001 PED BSI TESTED*	ISO 9001 PED BSI TESTED*	ISO 9001 PED BSI TESTED*
Diameter of Shell	mm	40	40	50	50	50
Total Height (approx.)	mm	148	248	240	295	350
MOC of Shell	–	SS 316L (1.4435)	SS 316L (1.4435)	SS 316L (1.4435)	SS 316L (1.4435)	SS 316L (1.4435)
Min. Wall Thickness	mm	1.2	1.2	1.2	1.2	1.2
Test Pressure	Bar	35	35	35	35	35
Anti-Corrosive Treatment	–	Outer surfaces are EP Powder coated having Thickness 50 Micron Min. RAL Shade 3000	Outer surfaces are EP Powder coated having Thickness 50 Micron Min. RAL Shade 3000	Outer surfaces are EP Powder coated having Thickness 50 Micron Min. RAL Shade 3000	Outer surfaces are EP Powder coated having Thickness 50 Micron Min. RAL Shade 3000	Outer surfaces are EP Powder coated having Thickness 50 Micron Min. RAL Shade 3000
Service Pressure	Bar	10	10	10	10	10
Type of Operating Mechanism	–	Automatic	Automatic	Automatic	Automatic	Automatic

TECHNICAL SPECIFICATIONS (200mm Barrel)

Product Code	UOM	CF-001340ACP ● CF-001340BC ● CF-001340DC ● CF-001340CC ● CF-001340EC ●	CF-001342ACP ● CF-001342BC ● CF-001342DC ● CF-001342CC ● CF-001342EC ●	CF-001344ACP ● CF-001344BC ● CF-001344DC ● CF-001344CC ● CF-001344EC ●	CF-001346ACP ● CF-001346BC ● CF-001346DC ● CF-001346CC ● CF-001346EC ●	CF-001348ACP ● CF-001348BC ● CF-001348DC ● CF-001348CC ● CF-001348EC ●
Type of Pressure Gauge		Magnetic Bourdon Tube Type	Magnetic Bourdon Tube Type	Magnetic Bourdon Tube Type	Magnetic Bourdon Tube Type	Magnetic Bourdon Tube Type
Type of Dis. Fitting & Length	mm	Direct Nozzle	Direct Nozzle	Direct Nozzle	Direct Nozzle	Direct Nozzle
Concentration (V/wt.)	%	4.7	4.7	4.7	4.7	4.7
Coverage Volume	m^3	0.130	0.260	0.290	0.520	0.650
Min. Discharge Time	Sec.	1 to 3	1 to 3	1 to 3	1 to 3	1 to 3
Operating Temperature Range(approx.)	^0C	-20 to 60	-20 to 60	-20 to 60	-20 to 60	-20 to 60
Actuation Temperature**	^0C	57°	57°	57°	57°	57°
Applicable to Type of Fire	–	A, B, C ,& Electrical Started Fire	A, B, C ,& Electrical Started Fire	A, B, C ,& Electrical Started Fire	A, B, C ,& Electrical Started Fire	A, B, C ,& Electrical Started Fire
Gross Weight (approx.)***	Kg	1.06	1.17	1.6	1.9	2.1
Product Warranty****	Year	10	10	10	10	10

TECHNICAL SPECIFICATIONS (200mm Barrel)						
Product Code	**UOM**	**CF-001340ACP** 🟠 **CF-001340BC** 🔴 **CF-001340DC** 🟡 **CF-001340CC** 🟢 **CF-001340EC** 🔵	**CF-001342ACP** 🟠 **CF-001342BC** 🔴 **CF-001342DC** 🟡 **CF-001342CC** 🟢 **CF-001342EC** 🔵	**CF-001344ACP** 🟠 **CF-001344BC** 🔴 **CF-001344DC** 🟡 **CF-001344CC** 🟢 **CF-001344EC** 🔵	**CF-001346ACP** 🟠 **CF-001346BC** 🔴 **CF-001346DC** 🟡 **CF-001346CC** 🟢 **CF-001346EC** 🔵	**CF-001348ACP** 🟠 **CF-001348BC** 🔴 **CF-001348DC** 🟡 **CF-001348CC** 🟢 **CF-001348EC** 🔵
Transportation Bracket						
MOC	–	Black Powder Coated Ms	Black Powder Coated Ms	Black Powder Coated Ms	Black Powder Coated Ms	Black Powder Coated Ms
Dimension H*W*D	mm	104 x 77 x 57	177 x 77 x 57	170 x 87 x 67	225 x 87 x 67	282 x 87 x 67

* Mini tested for it fire fighting capabilities by BSI.
**Quartzoid bulb in other temperature setting as below is available on request and would be dependent on MOQ for your region. Please check the availability and delivery time before ordering.
***It includes Empty Extinguisher, Contents, QBD / Barrel.
****The warranty is subject to the terms and conditions mentioned on the warranty card.

QUARTZOID BULB KEY

🟠 57°C / 135°F | 🔴 68°C / 155°F | 🟡 79°C / 174°F | 🟢 93°C / 200°F | 🔵 141°C / 286°F

CERTIFICATIONS

CE 1128

bsi. Tested

PRODUCT PICTURES



100 GM



200 GM



300 GM



400 GM



500 GM

UL & CE CERTIFIED PRESSURE SWITCH (OPTIONAL)

The presence of pressure switch marks the extinguishing units monitorable in nature so the user can always check the system's readiness. The device's role is to convert a mechanical action into an electrical impulse for the control panel to read.



ENGINEERING DRAWINGS

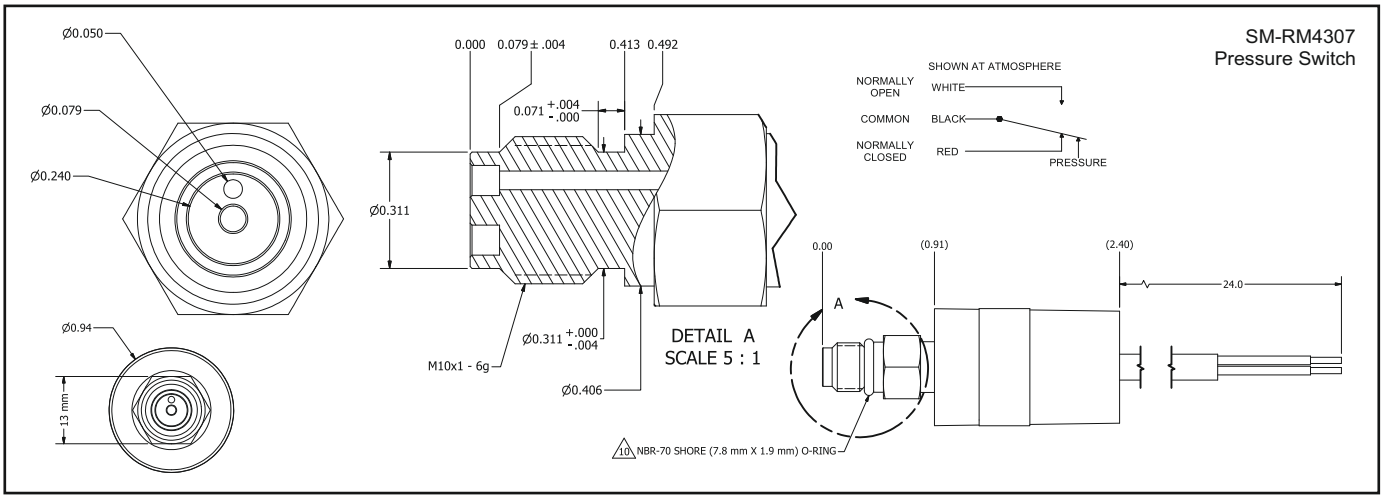

TECHNICAL SPECIFICATIONS	
Product Code	**SM-RM4307**
Description	Pressure Switch SPDT (Switch Point 5Bar / 72.5 PSIG decreasing) NC & NO -Imp
Increasing Activation	130 PSIG ± 9 PSIG [9 BAR]
Decreasing Activation	72.5 PSIG ± 7 PSIG [5 BAR]
Max Pressure	290 PSIG
Connector	NONE.
Fitting	M10 WITH DEFLATOR.
Fitting Material	BRASS.
Body Material	PLASTIC
Electrical Rating	3A 240 VAC/28 VDC.
Wire Jacket/insulator Material	PVC
O-ring Provided With Switch	NBR-70 SHORE (7.8X1.9 mm)
Certification	UL, RoHS, CE

*v3' Published Date is 28-04-2025.
**Regular R&D and product improvisations may lead to change in product specifications in this data sheet, without any prior notice.